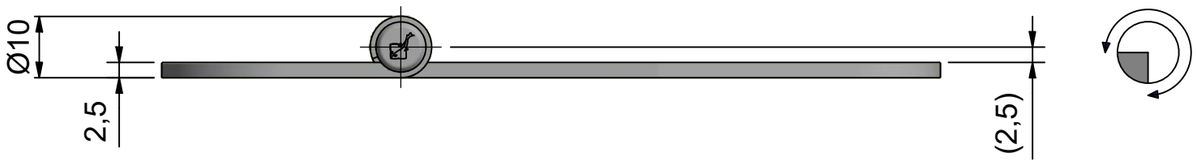

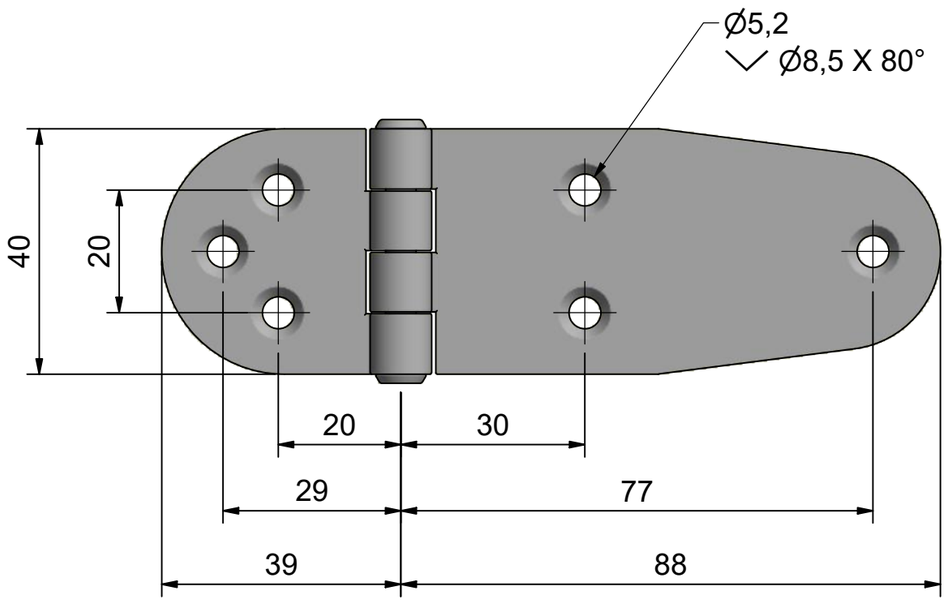

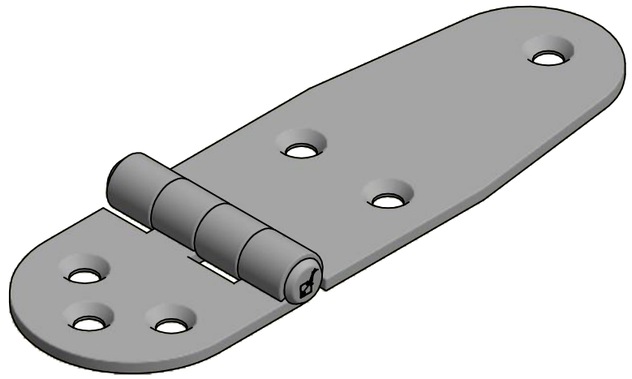

AISI304/Electro polished	Date V2 200316/LW
Description **Hinge 40x127**	Item no. **444011**