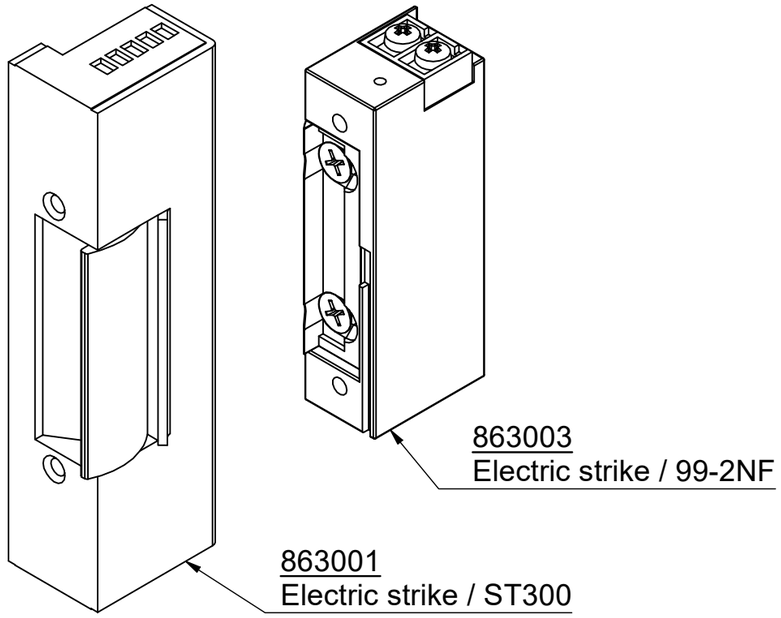

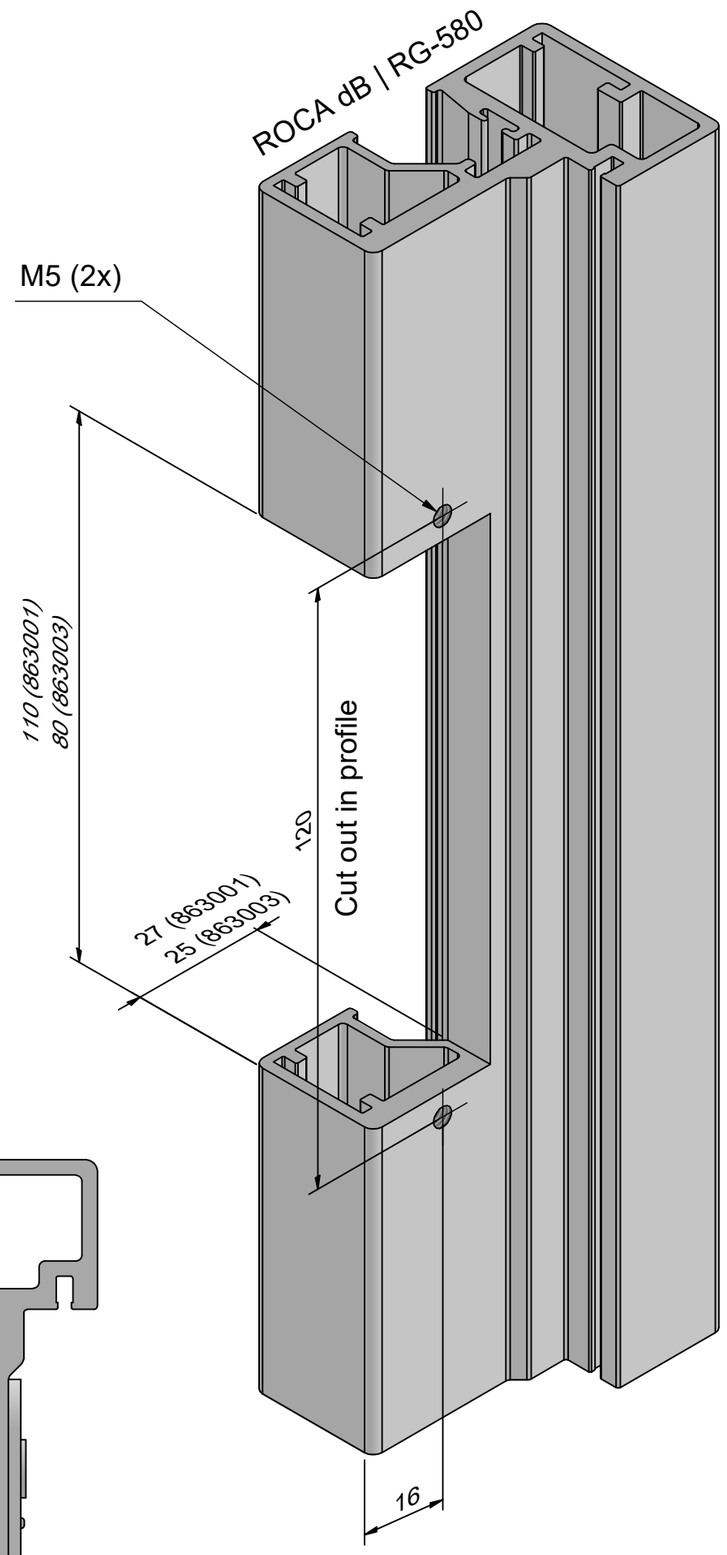

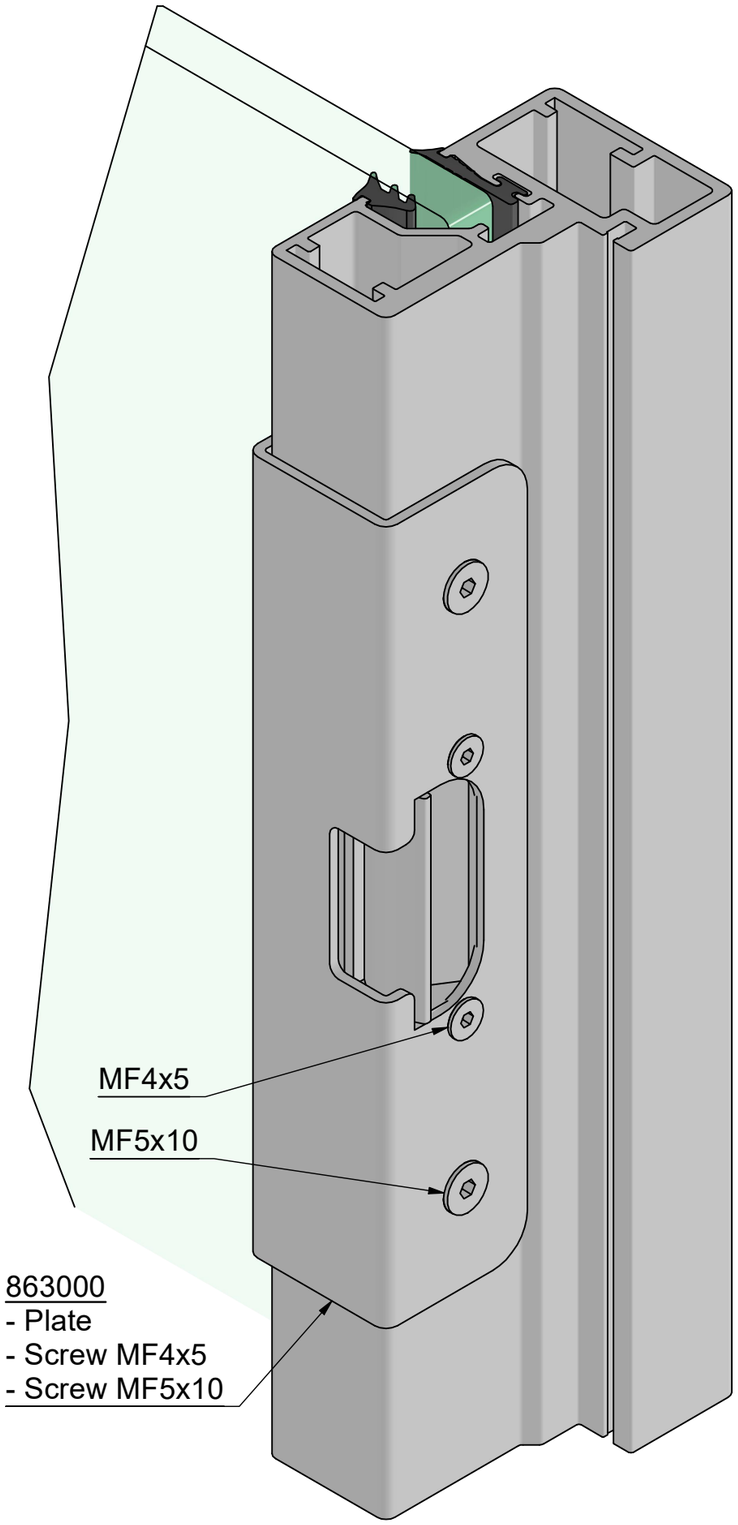

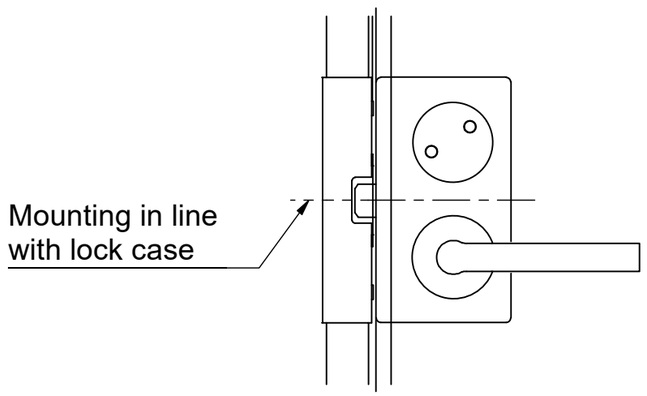

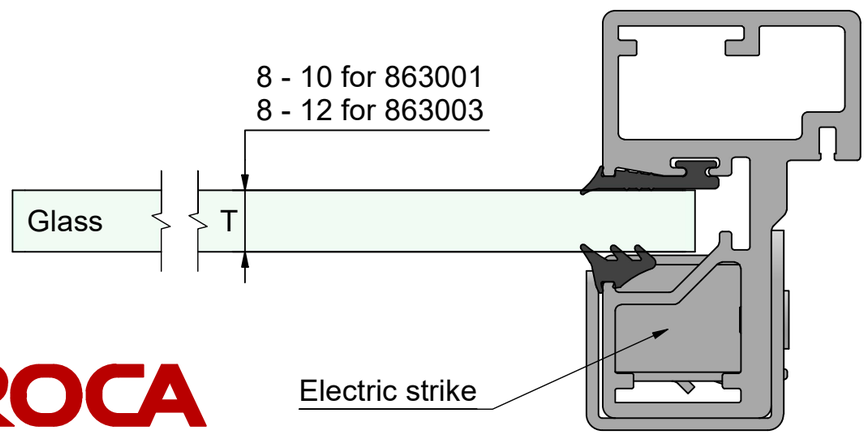

ROCA

www.rocaindustry.com

Plate & screws for electric strike	Date V4 240215/AC
Description **RG-589**	Item no. **863000**