A3

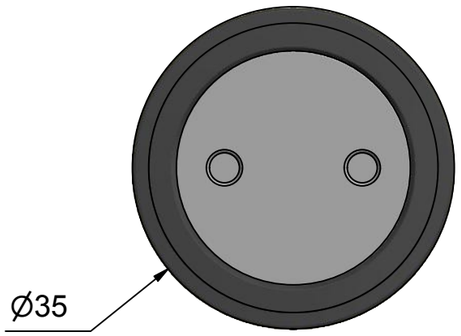

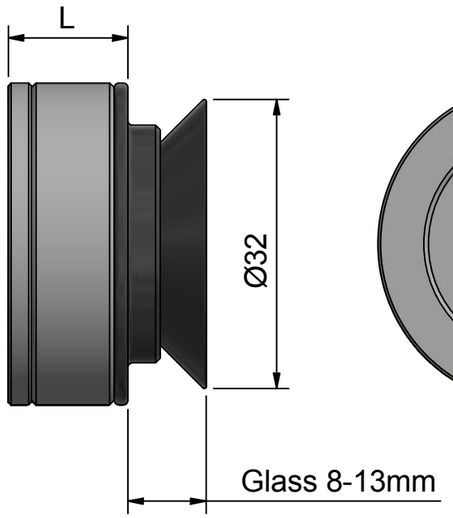

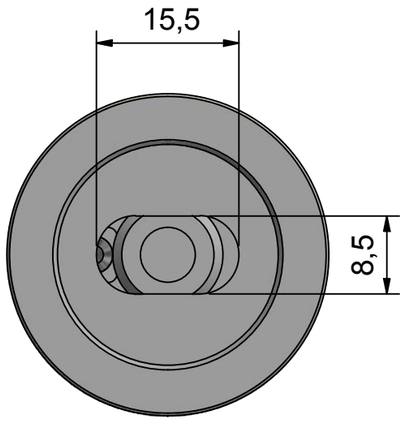

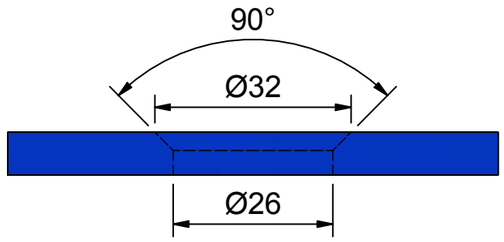

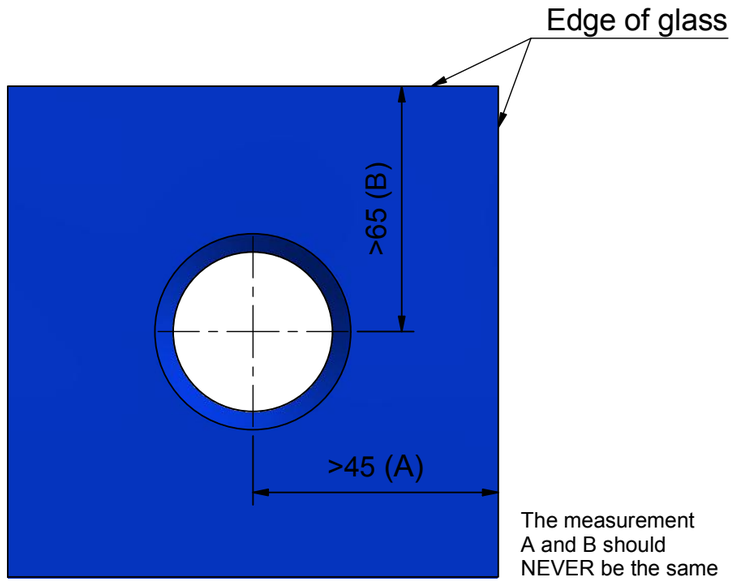

The measurement
A and B should
NEVER be the same

After the adapter has been adjusted, tighten
the set screw to fixate the lenght of the point fixing

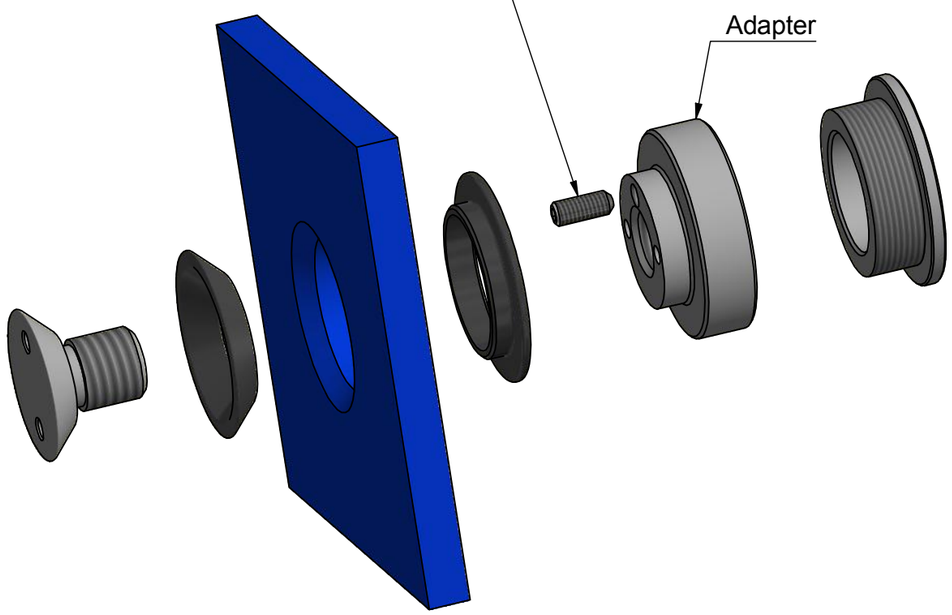

The distance between
the point fixings should
Not exceed 800mm

Item No.	L
861504	15-20
861505	30-35

Point fixing, Counter sunk V4 190312/AG

RG-173

ROCA®